WD SERIES

ISSUE 1

Brushless DC/AC Servomotors

MVG

WD SERIES

WD40

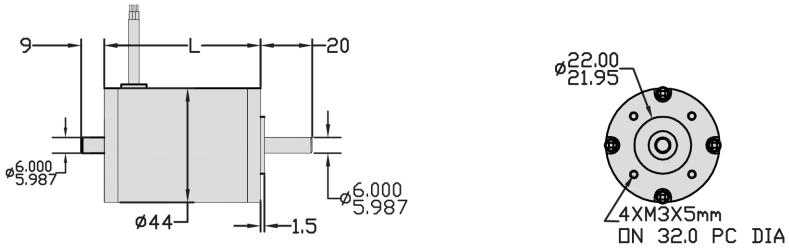

MODEL	L	
	MOTOR BODY	WITH ENCODER
WD40-04	60.5	90.5
WD40-06	73.2	103.2
WD40-08	85.9	115.9

WD60

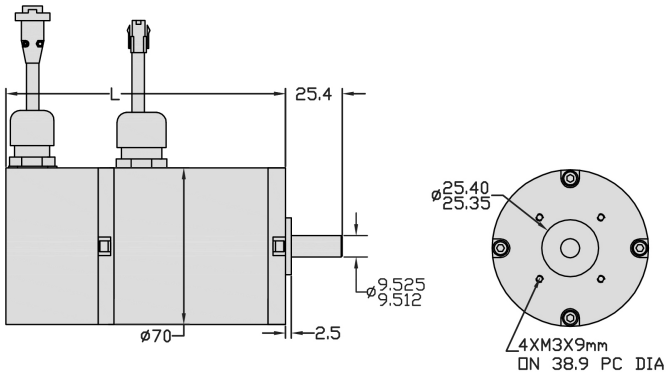

MODEL	L	
	WITH ENCODER	WITH ENCODER AND BRAKE
WD60-04	127.7	169.7
WD60-06	140.4	182.4
WD60-08	153.1	195.1
WD60-10	165.8	207.8
WD60-12	178.5	220.5
WD60-32	305.5	347.5

WD60

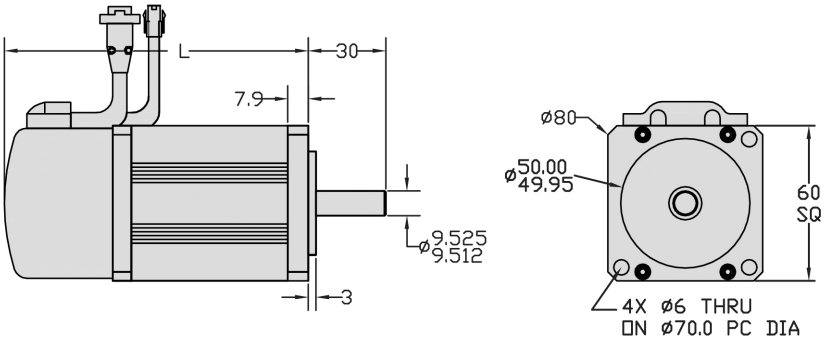

MODEL	L	
	WITH ENCODER	WITH ENCODER AND BRAKE
WD60-04	117.7	156.8
WD60-06	130.4	169.5
WD60-08	143.1	182.2
WD60-10	155.8	194.9
WD60-12	168.5	207.6
WD60-16	193.9	233.0

WD86

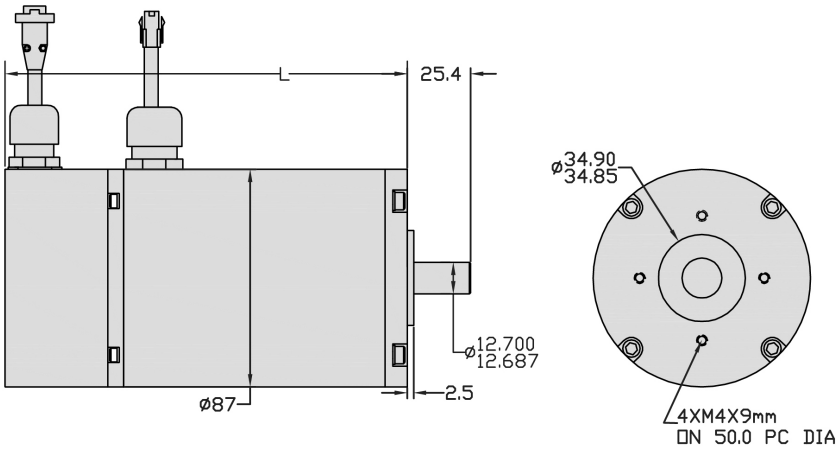

MODEL	L	
	WITH ENCODER	WITH ENCODER AND BRAKE
WD86-04	135.0	180.0
WD86-06	147.7	192.7
WD86-08	160.4	205.4
WD86-12	185.8	230.8

WD SERIES

WD86

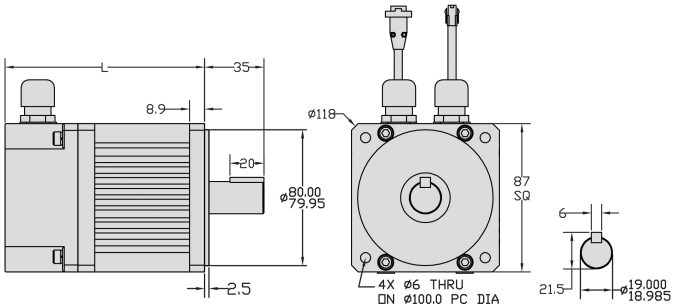

MODEL	L(mm)	
	WITH ENCODER	WITH ENCODER AND BRAKE
WD86-04	119.0	164
WD86-06	131.7	176.7
WD86-08	144.4	187.4
WD86-12	169.8	214.8

WD100

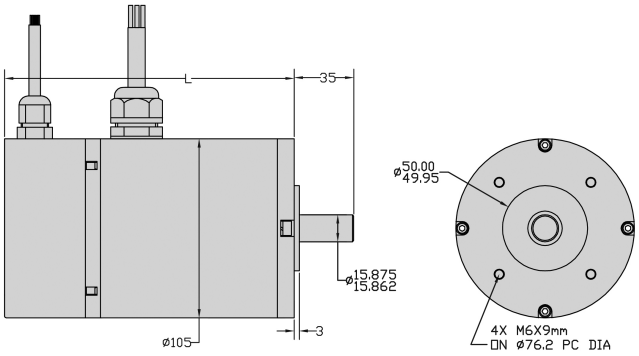

MODEL	L(mm)	
	WITH ENCODER	WITH ENCODER AND BRAKE
WD100-04	144.9	216.2
WD100-08	170.3	221.2

WD130

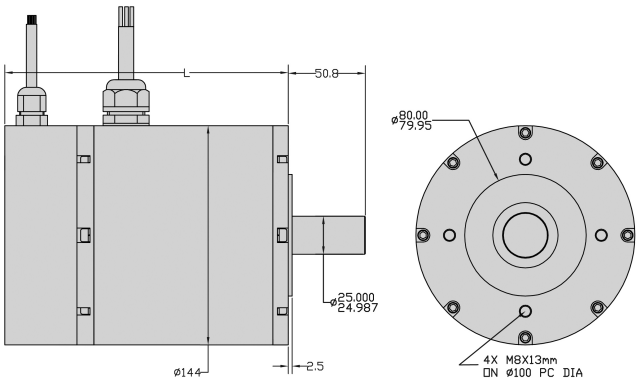

MODEL	L(mm)	
	WITH ENCODER	WITH ENCODER AND BRAKE
WD130-04	161.4	
WD130-08	186.8	

WD180

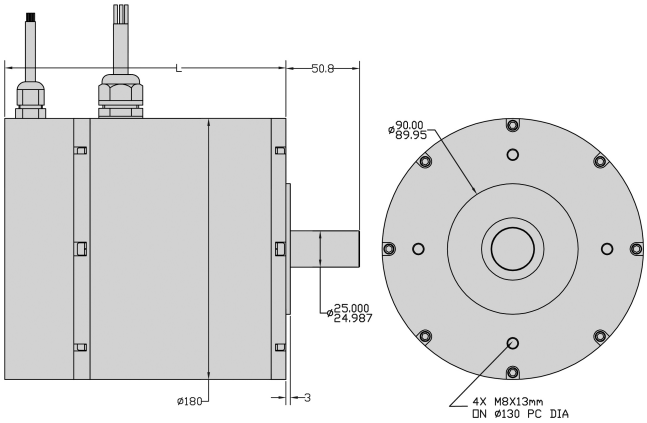

MODEL	L(mm)	
	WITH ENCODER	WITH ENCODER AND BRAKE
WD180-06	205.7	

WD SERIES

Motor type	Winding		Voltage gradient +15% - 5%	Net weight (no brake fitted)	Body Length	Cont. stall torque	Cont. stall current (rms)	Max. Cogging torque	Peak torque	Max. Peak current	Resist-ance	Induct-ance	Max. Mecha ni-cal speed	Rotor inertia (no brake fitted)	Torque constant (3x Ktrms)	Max. EMF speed	Nominal speed	Nominal torque	Nominal power
			V/Krpm	kg	mm	Nm	Amps	Nm	Nm	Amps	Ohms	mH	R.P.M.	kg.cm²	Nm/A	V	rpm	Nm	kW
WD40-04	DA	●	3.5	0.4	60.5	0.48	7.20	0.013	1.02	25.50	0.6	0.4	7000	0.029	0.041	24	4100	0.28	0.12
	FA		5.8	0.4	60.5	0.48	4.58	0.013	1.02	16.20	1.50	1.1	7000	0.029	0.065	39	4800	0.28	0.14
	JA	●	13.5	0.4	60.5	0.48	1.81	0.013	1.02	6.40	7.8	6.7	7000	0.029	0.163	97	4300	0.28	0.13
WD40-06	EA	●	6.3	0.6	73.2	0.8	7.98	0.018	2.20	28.60	1.4	1.0	7000	0.043	0.077	46	4300	0.60	0.27
	FA		8.4	0.6	73.2	0.8	6.34	0.018	2.20	22.70	2.2	1.6	7000	0.043	0.097	58	4400	0.60	0.28
	KA	●	26.5	0.6	73.2	0.8	2.01	0.018	2.20	7.20	19.5	17.0	7000	0.043	0.308	183	4100	0.60	0.26
	LA		32.0	0.6	73.2	0.8	1.60	0.018	2.20	5.70	28.5	24.8	7000	0.043	0.388	231	4000	0.60	0.25
WD40-08	DA		7.0	0.8	85.9	1.05	10.78	0.039	3.11	38.20	1.2	0.9	7000	0.058	0.083	49	4100	0.85	0.37
	FA	●	11.5	0.8	85.9	1.05	6.74	0.039	3.11	23.90	2.9	2.1	7000	0.058	0.131	78	4500	0.85	0.40
	JA		27.0	0.8	85.9	1.12	2.90	0.039	3.37	10.30	15.6	13.4	7000	0.058	0.330	197	3700	0.92	0.36
WD60-04	CB		2.8	0.9	117.7	0.8	19.39	0.037	2.20	67.9	0.06	0.14	8000	0.141	0.033	23	5100	0.6	0.32
	EB	●	4.5	0.9	117.7	1.26	20.75	0.037	3.88	74	0.16	0.34	8000	0.141	0.053	36	5500	1.06	0.61
	GA	●	27.6	0.9	117.7	1.51	4.16	0.042	4.79	14.9	6.07	13.83	7000	0.141	0.324	193	4000	1.31	0.55
WD60-06	CB		4.2	1.2	130.4	1.4	25.19	0.042	4.39	89.9	0.1	0.21	8000	0.210	0.050	34	5400	1.2	0.68
	EB	●	6.7	1.2	130.4	1.4	15.79	0.042	4.39	56.4	0.24	0.51	8000	0.210	0.079	54	6000	1.2	0.75
	IA		65.7	1.2	130.4	1.75	2.07	0.042	5.67	7.4	22.72	51.77	7000	0.210	0.772	460	4100	1.55	0.67
WD60-08	CB	●	5.8	1.5	143.1	1.61	21.5	0.052	5.16	76.6	0.12	0.25	8000	0.279	0.068	46	5000	1.41	0.74
	IB	●	23.1	1.5	143.1	1.61	5.4	0.052	5.16	19.2	1.97	4.26	8000	0.279	0.271	185	4200	1.41	0.62
	FA		43.7	1.5	143.1	1.97	3.55	0.054	6.48	12.7	6.57	16.36	7000	0.279	0.514	306	4800	1.77	0.89
WD60-10	BB		5.6	1.8	155.8	1.75	24.58	0.064	5.67	87.4	0.1	0.22	8000	0.347	0.066	45	5200	1.55	0.84
	HB	●	22.4	1.8	155.8	1.75	6.15	0.064	5.67	21.9	1.56	3.37	8000	0.347	0.263	179	5100	1.55	0.83
	DA		34.4	1.8	155.8	2.32	5.4	0.064	7.76	19.3	3.29	8.19	7000	0.347	0.404	241	3800	2.12	0.84
WD60-12	CB	●	8.6	2.2	168.5	1.97	18.2	0.073	6.48	64.7	0.16	0.41	8000	0.416	0.101	69	5700	1.77	1.06
	GB		21.7	2.2	168.5	1.97	7.21	0.073	6.48	25.6	1.19	2.56	8000	0.416	0.255	174	5100	1.77	0.95
	DA	●	41.3	2.2	168.5	2.67	5.24	0.073	9.04	18.8	3.95	9.83	7000	0.416	0.485	289	3500	2.47	0.91
WD60-32	CA	●	88.2	4.3	295.5	3.38	3.2	0.107	11.64	11.3	5.4	16.4	7000	1.104	1.036	617	4500	3.18	1.50
	DA		111.2	4.3	295.5	3.38	2.51	0.107	11.64	9	8.5	25.9	7000	1.104	1.306	778	5000	3.18	1.67
WD86-04	EB	●	10.3	1.8	80.0	1.47	10.93	0.052	4.65	38.90	0.24	0.89	8000	0.526	0.121	82	4400	1.27	0.59
	CA	●	25.5	1.8	80.0	2.32	7.24	0.052	7.76	26.1	1.46	4.54	5000	0.526	0.299	127	3600	2.12	0.80
	DA		32.1	1.8	80.0	2.32	5.76	0.052	7.76	20.7	2.3	7.18	5000	0.526	0.377	161	3400	2.12	0.75
WD86-06	BB		7.9	2.2	92.7	1.61	15.77	0.076	5.16	56.30	0.08	0.34	8000	0.772	0.093	64	4100	1.41	0.61
	FB		19.4	2.2	92.7	2.04	8.28	0.076	6.73	29.70	0.5	2.13	8000	0.772	0.228	155	4500	1.84	0.87
	DA	●	48.2	2.2	92.7	3.38	5.75	0.078	11.64	20.7	3.46	10.77	5000	0.772	0.566	241	2400	3.18	0.80
WD86-08	DB	●	16.3	2.8	105.4	2.32	11.62	0.106	7.76	41.00	0.27	1.14	8000	1.078	0.191	130	4000	2.12	0.89
	BA		40.5	2.8	105.4	4.08	8.39	0.106	14.20	30.1	1.85	5.75	5000	1.078	0.475	202	2600	3.88	1.06
	DA		64.2	2.8	105.4	4.08	5.29	0.106	14.20	19	4.61	14.36	5000	1.078	0.754	321	2200	3.88	0.89

WD SERIES

Motor type	Winding		Voltage gradient +15% - 5%	Net weight (no brake fitted)	Body Length	Cont. stall torque	Cont. stall current (rms)	Max. Cogging torque	Peak torque	Max. Peak current	Resist-ance	Induct-ance	Max. Mechani-cal speed	Rotor inertia (no brake fitted)	Torque constant (3x Ktrms)	Max. EMF speed	Nominal speed	Nominal torque	Nominal power
			V/Krpm	kg	mm	Nm	Amps	Nm	Nm	Amps	Ohms	mH	R.P.M.	kg.cm^2	Nm/A	V	rpm	Nm	kW
WD86-08	DB	●	16.3	2.8	105.4	2.32	11.62	0.106	7.76	41.00	0.27	1.14	8000	1.078	0.191	130	4000	2.12	0.89
	BA		40.5	2.8	105.4	4.08	8.39	0.106	14.20	30.1	1.85	5.75	5000	1.078	0.475	202	2600	3.88	1.06
	DA		64.2	2.8	105.4	4.08	5.29	0.106	14.20	19	4.61	14.36	5000	1.078	0.754	321	2200	3.88	0.89
WD86-10	BB		13.2	3.4	118.1	2.46	15.42	0.131	8.27	54.20	0.16	0.25	8000	1.264	0.155	106	4300	2.26	1.02
	CB		16.7	3.4	118.1	2.46	12.19	0.131	8.27	42.80	0.21	0.9	8000	1.264	0.196	133	4400	2.26	1.04
	CA	●	63.7	3.4	118.1	4.79	6.31	0.131	16.80	22.6	3.65	11.36	4000	1.264	0.748	255	2500	4.59	1.20
WD86-12	ZB		10.6	3.9	130.8	2.46	19.40	0.155	8.27	67.70	0.06	0.27	8000	1.510	0.124	85	3700	2.26	0.88
	DB	●	24.5	3.9	130.8	2.46	8.39	0.155	8.27	29.30	0.4	1.71	8000	1.510	0.287	196	4700	2.26	1.11
	AA	●	48.2	3.9	130.8	5.5	9.63	0.155	19.40	34.5	1.75	5.46	4000	1.510	0.566	193	1900	5.30	1.05
WD86-16	AB	●	16.8	4.4	156.2	3.73	18.68	0.155	12.92	66.30	0.14	0.58	8000	1.510	0.197	134	4600	3.53	1.70
	CB	●	26.7	4.4	156.2	3.73	11.75	0.155	12.92	41.70	0.34	1.44	8000	1.510	0.313	213	5300	3.53	1.96
	AA		64.2	4.4	156.2	5.71	7.51	0.155	20.17	26.9	2.34	7.27	4000	2.013	0.754	257	2300	5.51	1.33
WD100-04	Z		7.5	2.8	144.9	3.38	36.73	0.071	11.64	132.3	0.06	0.44	6000	0.696	0.088	45	4300	3.18	1.43
	CB	●	15.1	2.8	144.9	3.38	18.35	0.071	11.64	66.1	0.25	1.75	6000	0.696	0.177	90	3600	3.18	1.20
WD100-08	Z		15.1	3.7	170.3	5.85	32.65	0.130	20.68	117.5	0.13	0.89	6000	1.340	0.177	90	4400	5.65	2.60
	DB		38.0	3.7	170.3	5.85	12.96	0.130	20.68	46.7	0.8	5.54	6000	1.340	0.446	228	3400	5.65	2.01
WD130-04	ZB		13.7	5.5	161.4	7.26	44.76	0.141	25.84	161.5	0.06	0.38	5000	7.495	0.161	69	3700	7.06	2.74
	DB	●	34.3	5.5	161.4	7.26	17.9	0.141	25.84	64.6	0.39	2.37	5000	7.495	0.402	171	3000	7.06	2.22
WD130-08	A4B		8.3	6.7	186.8	9.73	99.95	0.212	34.88	360	0.014	0.075	5000	7.495	0.097	42	2800	9.53	2.79
	AB		34.5	6.7	186.8	9.73	24.03	0.212	34.88	86.5	0.17	1.08	5000	14.400	0.406	173	3800	9.53	3.79
WD180-04	Z10	●	19.3	7.5	193.0	27.03	118.8	0.120	98.20	433.5	0.02	0.03	4000	20.952	0.227	77	2200	26.83	6.18
WD180-06	Z10		29.0	9.0	205.7	34.1	100	0.180	124.07	364.7	0.032	0.05	4000	31.233	0.341	116	2700	33.9	9.59
WD180-08	A10		50.20	10.5	218.4	40.45	68.67	0.240	147.32	250.20	0.07	0.11	4000	41.514	0.590	201	3000	40.25	12.65

● Preferred motor type

MOTOR TYPE DEFINITION(For brushless types)

For example:8WD86-08CB-001FM

WD: Brushless servomotor

86: 86mm square frame servomotor

08CB:Number of armature, 08:Stator stack;CB:magnet wire;

001:The serial number

F :Square flange

M :Accessory,for example:M-encoder;B-brake;C-tacho;H-hall;J-gearbox

WD SERIES

Frame Size		Voltage gradient availability																							
		1.8	2.8	3.6	4.5	5.7	7.1	9.0	11.3	14.2	16	24	30	38	48	61	76	96	102	128	162	204	257	324	408
40	04																								
	06																								
	08																								
60	04																								
	06																								
	08																								
	10																								
	12																								
86	04																								
	06																								
	08																								
	10																								
	12																								
	16																								
100	04																								
	08																								
130	04																								
	08																								
180	04																								
	06																								
	08																								

STANDARD/OPTIONAL FEATURES

DESCRIPTION OPTIONS		SERVOMOTOR TYPE					
		10WD40	8WD60	8WD86	8WD100	8WD130	10WD80
WAVEFORM	SINUSOIDAL	■	■	■	■	■	■
MECHANICAL	SQUARE FLANGE MOUNTED	■	■	■	■	■	■
	ROUND FLANGE MOUNTED	●	●	●	●	●	●
	NEMA FLANGE MOUNTED	●	●	●	●	●	●
	ROUND HOUSING AND FLANGE	●	●	●	●	●	●
	NO KEYWAY	■	■	■	■	■	■
	KEYWAY	○	●	●	●	●	●
	PLAIN SHAFT	●	●	●	●	●	●
	OUTPUT SHAFT OD (mm)	4~8	6~14	8~19	8~25	8~25	8~25
	IP65/IP64(AT SHAFT WITH SEAL FITTED)	●	●	●	●	●	●
ELECTRICAL CONNECTION	INTERCONNECTRON MOTOR AND FEEDBACK CONNECTORS	■	■	■	■	■	■
	CUSTOMER SPECIFIED CONNECTION	●	●	●	●	●	●
	FLYING LEADS	●	●	●	●	●	●
HOLDING BRAKE	24 VDC SPRING APPLIED	●	●	●	●	●	●
FEEDBACK DEVICE	INCREMENTAL ENCODER WITH BLOCK COMMUTATION	■	■	■	■	■	■
	RESOLVER	●	●	●	●	●	●
	SINGLE OR MULTITURN ASSOLUTE ENCODER	●	●	●	●	●	●
	ENCODER MOUNTING KIT TO SUIT CUSTOMER SPECIFIED EDCODER	●	●	●	●	●	●
CE APPROVAL	UL CERTIFICATION	●	●	●	●	●	●

■ STANDARD FEATURE ● OPTION ○ NOT AVAILABLE

SHENZHEN MINGYAGE MOTOR CO., LTD
B104, Donghaiwong Building, Bantian, Shenzhen China. 518129
Tel: +86 755 89505180, Email: sales@kosun.com.cn
LUOYANG CHENGGUAN AUTO-CONTROL TECHNOLOGY CO., LTD
Kaiyuan Road, Airport Industrial Park, Luoyang China. 471132
Tel: +86 379 67892220, Email: sales@myg-control.com
www.kosun.com.cn www.myg-control.com